Ohio EPA
40 years and moving forward

John R. Kasich, Governor
Mary Taylor, Lt. Governor
Scott J. Nally, Director

June 27, 2013

RE: Pretreatment and Storm Water Inspection

Mr. Chris Ford
ADVICS Manufacturing Ohio, Inc.
1650 Kingsview Dr.
Lebanon, Ohio 45036

Dear Mr. Ford:

On June 12, 2013, I met with you to conduct a pretreatment compliance inspection. In addition to inspecting your industrial wastewater pretreatment system, I also reviewed your compliance with the requirements of your industrial storm water permit.

Since my previous inspection, ADVICS violated its daily maximum and monthly average zinc limit in December 2012 when you reported a result of 7,720 ug/l on December 27th. This result violated your daily limit of 2,610 ug/l and led to the monthly average being 2,160 ug/l which violated the 1,480 ug/l limit. You provided timely notification and determined that the violation was associated with annual maintenance of the filter press. Subsequent monitoring showed a return to compliance, and a review of available monitoring results, yet to be reported (due July 20, 2013), revealed compliant results. With your explanation, no further response or action is necessary.

From my inspection, the following were identified as needing your attention:

1. In addition to recording that the pH meter was calibrated on your Daily Sampling Log sheet when compliance monitoring occurs, I ask that you include the slope associated with that calibration as an indication of whether the calibration was acceptable. The pH meter's manual should establish what an acceptable slope is.

2. I found the storm water checklist used for the twelve areas of your facility that are inspected monthly, to be very good. Please consider making the checklist unique to each area based on the nature of the operations, conveyance system, materials and controls present. Please let me know if you create customized checklists.

3. I believe the facility site map that is part of your SWP3 should be amended so that it identifies the twelve areas that are inspected monthly. Consider color-coding or enumerating the areas and indicating their boundaries.

4. Finally, please keep me informed of your progress in bringing the anodize line back into production. Once your discharge includes appreciable amounts of waste water from this line, please arrange to perform compliance monitoring as soon as possible and include a note in eDMR to indicate its return to production.

Please provide a written response to the items I have presented in this letter by July 26, 2013. If you have any questions concerning this letter or the inspection forms, please call me at (937) 285-6095.

Sincerely,

Matt Walbridge
Environmental Specialist II
Division of Surface Water

MW/tb

cc: Ryan Laake – Ohio EPA, Central Office, DSW
ec: John Habig – City of Lebanon

Enclosure

Ohio Environmental Protection Agency

Southwest District Office

PRETREATMENT INSPECTION REPORT

PERMIT NUMBER	POTW FACILITY NUMBER	DATE CONDUCTED
*1DP00045*BP*	*OH0021509*	*June 12, 2013*

INSPECTION TYPE	INSPECTOR	FACILITY TYPE	TIME IN	TIME OUT
I	*S*	*2*	*1000*	*1200*

GENERAL INFORMATION

NAME AND LOCATION OF FACILITY	POTW RECEIVING DISCHARGE
ADVICS Manufacturing Ohio, Inc. ***1650 Kingsview Drive*** ***Lebanon, OH 45036***	***City of Lebanon WWTP***

MAILING ADDRESS OF FACILITY

ADVICS Manufacturing Ohio, Inc.
1650 Kingsview Drive
Lebanon, OH 45036

CONTACT (NAME/TITLE/PHONE/e-MAIL)

Mr. Chris Ford / Senior Manufacturing Engineer / (513) 932-7878 ext. 239 / CFord@advics-ohio.com

FACILITY EVALUATION (See Inspection letter for more complete description)

(S = Satisfactory, M = Marginal, U = Unsatisfactory, NA = Not Applicable)

S	Sampling Procedures	*NA*	Compliance schedule requirements
S	Reporting	*NA*	Notification
M	Compliance with effluent limits *(Zinc in December 2012)*	*S*	Other – ***Industrial Stormwater Permit***

Name and Signature of Inspector(s)	Agency / Office / Telephone	Date
Matt Walbridge	***Ohio EPA / Southwest District Office / (937) 285-6095***	6-27-13
Signature of Reviewer	***Ohio EPA / Southwest District Office / (937) 285-6034***	**Date** 7/1/13

TOXICS MANAGEMENT

35. Are any listed toxic organics used in the facility? ~~Y~~/ N
    If yes, identify organics:

    (Stated that none are known to be used)

36. Does the facility have a current toxic organic management plan (TOMP)? ~~Y~~/ N

    If yes, is it being implemented? ***N.A.*** ~~Y/N~~

37. Has the facility had any uncontrolled releases or spills to the POTW since the previous inspection? If yes, please explain: ~~Y~~/ N

38. Does the facility need a spill prevention plan or slug discharge control plan? ~~Y~~/ N

    If yes, does the facility have a written plan? ***N.A.*** ~~Y/N~~

39. Identify any potential slug load or spill areas:

    There are several sources for slug loads, but since treatment occurs in batches, the potential for a slug to make it to the discharge is very low.

REQUIRED FOLLOW-UP ACTIONS

The log book simply records that the pH meter was calibrated – the slope should be included with the calibration date to show that the calibration was acceptable.

OTHER OBSERVATIONS

The currently mothballed anodize line is scheduled to become active mid to late-2013 for production of aluminum brake calipers for the Ford Mustang.

Treatment system area continues to be clean and orderly.

<u>Stormwater</u> – see attached form

SELF MONITORING

26. Sample location(s) described in the facility=s permit:

"Samples shall be collected from the sampling tap of the 'check and release' tank. The contents of the tank shall be homogenous when the sample is collected and no wastewater is to be added to the tank during a discharge event."

27. Is the facility sampling at the location(s) described in the permit? Y / ~~N~~
    If no, describe the actual location:

28. Is the location(s) where the facility is sampling representative? Y / ~~N~~
    If no, indicate a representative location:

29. Is the flow measured or estimated? Measured / ~~Estimated~~

    If measured, how often is the meter calibrated?

    They use the graduated marks on the discharge tank for reporting purposes.
    They also have a flow meter and have determined that meter calibration is not necessary.

    If estimated, describe method of estimation: ***NA***

30. Is pH monitored continuously? ~~Y~~ / N

    If yes, how often is the meter calibrated?

    The pH and ORP probes on the batch treatment tanks are calibrated weekly.

31. Does the facility collect its own samples? Y / ~~N~~

    If no, specify the sample collector:
    (Chris Ford is the only person to composite the collected samples, although sometimes 'E-shift' will collect one of the grab samples)

32. Are appropriate sampling procedures followed?
    - Monitoring frequencies Y / ~~N~~
    - Sample collection (grab for pH, O&G, etc) each ***batch is homogenized for 10-15 minutes*** Y / ~~N~~
    - Flow proportioned samples [1] ***N.A.*** ~~Y~~ / ~~N~~
    - Proper preservation techniques ***(including chilling for TTOs) (Sample bottles are pre-preserved)*** Y / ~~N~~
    - Sample holding times Y/~~N~~
    - Chain-of-custody forms Y / ~~N~~

[1] ***If multiple batch discharges occur, sample aliquots are proportional to the volume of each batch discharge.***

33. Are samples analyzed in accordance with 40 CFR 136? Y / ~~N~~

34. Laboratory conducting analyses:

    Belmont Laboratories

PROCESS AND WASTEWATER INFORMATION

24. List all processes generating wastewater, current wastewater flows, and where applicable, production rates as well as values on which the permit limits are based:

REGULATED PROCESS	SAMPLE LOCATION	WASTEWATER FLOW (GPD)		PRODUCTION DATA (SPECIFY UNITS)	
		Permit	Current	Permit	Current
1. Zinc Electroplate (includes alkaline wash w/ rinses and scrubber)		*not restricted*	*~8,000*	*n.a.*	*n.a.*
2. ~~Anodizing~~ *(moth balled but to be brought back)*			*NA*		
3. Zinc Strip			*Est. <20*		
4. Mop Water			*~500*		
5.					
6.					
7.					
8.					
Total Regulated Process Flow	*Final Check Tank*		*~8,000(1)*		
Noncontact Cooling					
Boiler Blowdown			*(900*)*		
Reverse Osmosis			*(1,900*)*		
Demineralizer Regeneration			*(2)*		
Water Softening			*(1,500*)*		
Filter Backwash					
Compressor Condensate					
Storm water					
Total of Dilute Flows			*0*		
Unregulated Flows					
Sanitary					
TOTAL FLOW			*~8,000(1)*		

(1) Average of reported flows for second half of 2012. Flows varied from ~4,300 to ~11,240. Variation is driven by how many batches are discharged. (one to three)

(2) Zinc electroplate rinse water is deionized and recycled to conserve water. The deionizer is regenerated periodically with the waste water being sent to the waste water treatment system. This source is accounted for as regulated waste water in #1

****These flows are not present at the compliance sampling point.***

25. For the above flows not discharged to the POTW, list point of discharge and permit (if any).

All flows are conveyed by a sanitary sewer tributary to the Lebanon WWTP.

19. Is there an alarm system for the system? Y / ~~N~~
Explain:

Level alarms on primary storage and treatment tanks, and decant and filter feed tanks.

PLC requires complete stage treatment cycles before the contents of tanks are allowed to be transferred.

20. Is there an operations and maintenance manual? Y / ~~N~~

21. Is an inventory of critical spare parts maintained? Y / ~~N~~
If yes, list:

pH and ORP probes along with spare mixer gears.

22. Are there any bypasses in the system? ~~Y~~ / N
If yes, describe the location:

Have bypasses occurred since the last inspection? ~~Y~~ / N

Was the POTW notified? ***N.A.*** ~~Y / N~~

23. Are residuals or sludges generated? Y / ~~N~~

Method of disposal:

Three sludge hoppers are emptied into a roll-off daily.

Filter press fabric is replaced annually.

Frequency and amount of disposal:

After about two batches, the filter press is emptied into the hoppers below it.

20 yd^3 roll-off about every third Friday.

Name of hauler/landfill/disposal facility:

Environmental Enterprises if the primary hauler, Clean Harbors is the back-up hauler

Is any sludge generated subject to RCRA regulations? Y / ~~N~~

Because chromium can sometimes be high, they treat all wastewater treatment sludge as a hazardous waste.

If land applying sludge, is there a sludge management plan? ***N.A.*** ~~Y / N~~

FACILITY OPERATIONAL CHARACTERISTICS CONTINUED

11. Any change in materials used in production since the last inspection? ~~Y~~ / N
If yes, explain:

12. Any expansion or production increase expected within the next year? ~~Y~~ / N
If yes, explain:

Anodize line will be coming back into production.

WASTEWATER TREATMENT

13. Provide a schematic diagram and description of the wastewater treatment system:

Please see attached diagram.

(Hexavalent chromium tank is moth-balled)

14. Was a PTI issued for the treatment system? Y / ~~N~~

15. Were there any modifications to the treatment system since the previous inspection? ~~Y~~ / N

If yes, was a PTI obtained? ***N.A.*** ~~Y / N~~

PTI Number: Date:

16. What is the treatment mode of operation? Batch / ~~Continuous / Combination~~

If batch, list the frequency and duration:

Up to two batches per day with occasional 3-batch days – although those batches are typically smaller than normal. (Final check tank has a capacity of ~5,500 gallons)

17. Who is responsible for operating the treatment system?

Bob Sticklen who supervises operators Rodney Webster and Adam Fletcher.
Steve Gtran is the off-shift operator plus there are other new trained operators (approx. six total).

18. How often is the treatment system checked?

Regularly. Wastewater treatment system is operated during 3rd and 1st shifts. Discharge currently occurs mostly during first shift but sometimes 1st and/or 2nd shift.

INDUSTRIAL USER INSPECTION CHECKLIST

Facility: ***ADVICS Mfg.***

Date of inspection: ***June 12, 2013***

OH Number of Receiving POTW: ***OH0021509***

IDP Number: ***1DP00045*BP***

Facility Representative: ***Mr. Chris Ford***

Inspector(s): ***Matt Walbridge***

COMPLIANCE

1. Date of last pretreatment inspection: ***June 7, 2012***

2. Has the facility been in compliance with its permit limits since the last inspection? ~~Y~~ / N
   If no, explain:

   Daily and monthly violation of zinc limits in December 2012.
   Monthly limit = 1480 ug/l, Reported 2160.2 ug/l
   Daily limit = 2,610 ug/l, Reported 7,720 ug/l for December 27, 2012.

   Initial sample result on December 5th was 2,000 ug/l which prompted additional samples to be collected to try to get the average down. It was the last of the four subsequent samples that came back high at 7,720 ug/l.

3. Is the facility in compliance with all other requirements?

Sampling procedures	Y / ~~N~~ / ~~NA~~
Reporting (late reporting, failure to report, etc)	Y / ~~N~~ / ~~NA~~
Compliance schedules	~~Y~~ / ~~N~~ / NA
Submitted BMR and 90 day compliance reports	~~Y~~ / ~~N~~ / NA
Any other requirements	~~Y~~ / ~~N~~ / NA

   If any of the above five answers is no, explain:

4. Was the facility required to perform any actions as a result of the last inspection? ~~Y~~ / N
   Explain any unresolved actions: ***None***

FACILITY OPERATIONAL CHARACTERISTICS

5. Number of Employees: ***~550***

6. Shifts/Day: ***3 (currently over a 20-hour workday)***

7. Production Days/Year: ***~244***

8. Hours/shift: ***8***
   Some areas are at 12-hour shifts and other areas have two shifts with a preventative maintenance shift in-between.

9. Any production changes since the last inspection? ~~Y~~ / N
   If yes, explain:

   Bath chemistries are all unchanged.

   Moth-balled anodize line is being brought back on-line and will ramp up through the end of the year.

10. General facility description and operations:

    Manufacture automotive brake assemblies. Operations include: Cleaning, washing, zinc electroplating with chromating, machining and assembly.

    Three of the four plating lines are in operation (although not at full capacity). Line 2 has the highest capacity. Line 3 continues to be in standby mode.

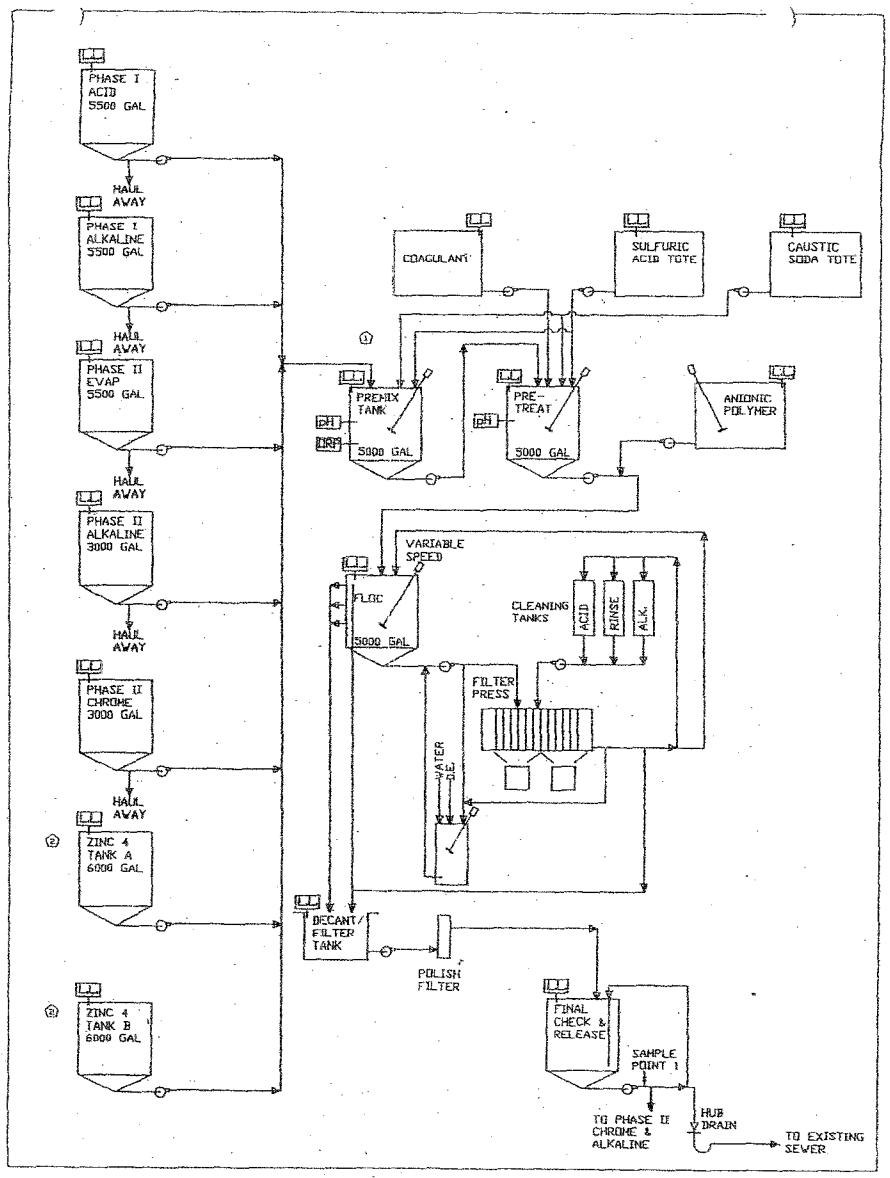

REV	DATE	CHANGE	BY
2	2/15/07	ADD ZINC 4	C.F.
1	1/1/03	REMOVE CR. TREAT	C.F.

ADVICE Manufacturing Ohio Inc
Lebanon, OH 45036 PHONE 932-7409

APV: 1	DATE: 1	SCALE: 1=8	
CHK: 1	DATE: 1	ASSET: 25000	
DSGN: C. FORD	DATE: 6/3/02		

NAME: WASTE WATER TREATMENT FLOW DIAGRAM

DRAWING NUMBER: WWT FLOW REV

Industrial Storm Water Reconnaissance Inspection;

Name of facility: ***ADVICS Manufacturing Ohio, Inc.***

Address: ***1650 Kingsview Drive***
Lebanon, OH 45036

Permit number: ***1GR00591*DG*** Applicable permit sector: ***AB1 (Their SIC code is 3745)***

Date of visit: ***June 12, 2013*** Time started: ***10:00*** Time ended: ***12:00***

Facility representative(s): ***Mr. Chris Ford***

OEPA inspector: ***Matt Walbridge***

SWP3:

A. Did the facility representative produce an SWP3? Y ~~/ N / Not requested~~

A1. Did it include a site map? Y ~~/ N~~

A2. Did it include schedules and procedures for the quarterly routine facility inspections? Y ~~/ N~~

A3. Did it include schedules and procedures for the comprehensive annual facility inspection? Y ~~/ N~~

A4. Did it include schedules and procedures for the quarterly visual assessment of storm water discharges ? Y ~~/ N~~

A5. If benchmark monitoring is required, does the SWP3 describe how and when that will be done? Y ~~/ N / NA~~

Comments:

I recommend that they consider amending the site map to identify the 12 areas that are inspected monthly and to develop unique check list items for each of these areas.

Inspection records:

B. Were inspection records available? Y ~~/ N~~

Comments:

- ***For monthly site inspections, which include roof areas, they use a very good checklist.***
- ***They are performing quarterly visual checks of runoff where it leaves the property and documenting these inspections very well.***

Site Observations;

C. Are materials stored exposed to weather? ~~Y /~~ N
If Yes, list materials.

Outdoor waste and chemical storage area is under cover. The pavement between the building and covered storage area continue to have some rust-colored staining and solids in the cracks but otherwise looked reasonably clean.

The compactor for regular waste had some materials escaping from the point where the bin attaches to the compactor unit. They are on different grades which causes there to be an opening where they join. It doesn't appear that much of the material from this open joint gets to the nearby storm drain.

D. Are there any structural storm water management practices used onsite? Examples include grassed swales, permeable pavement, inlet filters, detention ponds, engineered wetlands, mulch berms, silt fence, rain gardens . ~~Y /~~ N ~~/ Not sure~~

E. Number of outfalls from site/number inspected: **2 (maybe 3) / 2**

G. Did any show evidence of pollutants discharged in the storm water? ~~Y /~~ N

If yes, describe:

Although an outside break area/entranceway did appear to have, and have the potential to have, discarded foam ear plugs that get washed into a nearby catch basin.

H. Other observations/comments:

They are in their second of the required four quarterly sampling events.