National Pollutant Discharge Elimination System (NPDES) Permit Program

F A C T S H E E T

Regarding an NPDES Permit to Discharge to Waters of the State of Ohio
for the **Girard Water Pollution Control Facility**

Public Notice No.: 12-03-045
Public Notice Date: March 26, 2012
Comment Period Ends: April 26, 2012

OEPA Permit No.: **3PD00010*ND**
Application No.: **OH0025364**

Name and Address of Applicant:
City of Girard
945 South State Street
Girard, Ohio 44420

Name and Address of Facility Where Discharge Occurs:
Girard Water Pollution Control Facility
945 South State Street
Girard, Ohio 44420
Trumbull County

Receiving Water: **Little Squaw Creek**

Subsequent Stream Network: **Mahoning River, Beaver River (PA), Ohio River**

Introduction

Development of a Fact Sheet for NPDES permits is mandated by Title 40 of the Code of Federal Regulations, Section 124.8 and 124.56. This document fulfills the requirements established in those regulations by providing the information necessary to inform the public of actions proposed by the Ohio Environmental Protection Agency, as well as the methods by which the public can participate in the process of finalizing those actions.

This Fact Sheet is prepared in order to document the technical basis and risk management decisions that are considered in the determination of water quality based NPDES Permit effluent limitations. The technical basis for the Fact Sheet may consist of evaluations of promulgated effluent guidelines, existing effluent quality, instream biological, chemical and physical conditions, and the relative risk of alternative effluent limitations. This Fact Sheet details the discretionary decision-making process empowered to the Director by the Clean Water Act and Ohio Water Pollution Control Law (ORC 6111). Decisions to award variances to Water Quality Standards or promulgated effluent guidelines for economic or technological reasons will also be justified in the Fact Sheet where necessary.

Effluent limits based on available treatment technologies are required by Section 301(b) of the Clean Water Act. Many of these have already been established by U.S. EPA in the effluent guideline regulations (a.k.a. categorical regulations) for industry categories in 40 CFR Parts 405-499. Technology-based regulations for publicly-owned treatment works are listed in the Secondary Treatment Regulations (40 CFR Part 133). If regulations have not been established for a category of dischargers, the director may establish technology-based limits based on best professional judgment (BPJ).

Ohio EPA reviews the need for water-quality-based limits on a pollutant-by-pollutant basis. Wasteload allocations are used to develop these limits based on the pollutants that have been detected in the discharge, and the receiving water's assimilative capacity. The assimilative capacity depends on the flow in the water receiving the discharge, and the concentration of the pollutant upstream. The greater the upstream flow, and the lower the upstream concentration, the greater the assimilative capacity is. Assimilative capacity may represent dilution (as in allocations for metals), or it may also incorporate the break-down of pollutants in the receiving water (as in allocations for oxygen-demanding materials).

The need for water-quality-based limits is determined by comparing the wasteload allocation for a pollutant to a measure of the effluent quality. The measure of effluent quality is called PEQ - Projected Effluent Quality. This is a statistical measure of the average and maximum effluent values for a pollutant. As with any statistical method, the more data that exists for a given pollutant, the more likely that PEQ will match the actual observed data. If there is a small data set for a given pollutant, the highest measured value is multiplied by a statistical factor to obtain a PEQ; for example if only one sample exists, the factor is 6.2, for two samples - 3.8, for three samples - 3.0. The factors continue to decline as samples sizes increase. These factors are intended to account for effluent variability, but if the pollutant concentrations are fairly constant, these factors may make PEQ appear larger than it would be shown to be if more sample results existed.

Summary of Permit Conditions

In this draft permit, Ohio EPA is proposing to continue most of the discharge limits: dissolved oxygen, carbonaceous biochemical oxygen demand (CBOD), total suspended solids, oil and grease, chlorine, copper, bis(2-ethylhexyl)phthalate and pH. Toxicity limits and testing would also continue to ensure that fish are able to pass through lower Little Squaw Creek.

Current permit limits for silver are being removed because effluent data shows that it no longer have the reasonable potential to contribute to exceedances of water quality standards. Monitoring requirements at a reduced frequency are included in the draft permit.

New or lower water-quality-based limits are needed for lead and free cyanide because the new wasteload allocation shows that these pollutants have the reasonable potential to contribute to exceedances of water quality standards. The WPCF appears able to meet these new limits. Revised limits for mercury are included in the permit because the WPCF now appears to be able to meet the average water quality standard.

New limits are required for e coliform bacteria. Ohio has changed its Water Quality Standards rules to set standards for e. coli., rather than fecal coliform. The Agency has included a 12-month compliance schedule for this parameter because it is not clear that the WPCF can currently meet this limit.

This permit renewal is proposed for a term of approximately **5 years**, expiring on January 31, 2017. This schedule will allow the Girard WPCF permit to be on a similar schedule with the other facilities within the same watershed basin.

Table of Contents

Introduction 1

Summary of Permit Conditions 2

Procedures for Participation in the Formulation of Final Determinations 4

Location of Discharge/Receiving Water Use Classification 4

Facility Description 5

Description of Existing Discharge 6

Assessment of Impact on Receiving Waters 6

Development of Water-Quality-Based Effluent Limits 7

Reasonable Potential/ Effluent Limits/Hazard Management Decisions 9

Other Requirements 11

List of Figures

Figure 1 Approximate Location of Girard WPCF 13

Figure 2. Lower Mahoning River Study Area 14

List of Tables

Table 1. Effluent Characterization Based on Pretreatment Data and Ohio EPA Data 18

Table 2. Effluent Characterization Based on Self Monitoring Data 19

Table 3. Summary of Acute Toxicity Test Results 22

Table 4. Summary of Chronic Toxicity Test Results 24

Table 5. Effluent Data for the Girard WPCF 25

Table 6. Water Quality Criteria in the Study Area 26

Table 7. Instream Conditions and Discharger Flow for the CONSWLA Model 27

Table 8. Summary of Effluent Limits to Maintain Applicable Water Quality Criteria 28

Table 9. Parameter Assessment for Outfall 001 29

Table 10. Final Effluent Limits and Monitoring Requirements for the Girard WPCF 30

Attachment – River Segment Summary from the Ohio Integrated Report 32

Procedures for Participation in the Formulation of Final Determinations

The draft action shall be issued as a final action unless the Director revises the draft after consideration of the record of a public meeting or written comments, or upon disapproval by the Administrator of the U.S. Environmental Protection Agency.

Within thirty days of the date of the Public Notice, any person may request or petition for a public meeting for presentation of evidence, statements or opinions. The purpose of the public meeting is to obtain additional evidence. Statements concerning the issues raised by the party requesting the meeting are invited. Evidence may be presented by the applicant, the state, and other parties, and following presentation of such evidence other interested persons may present testimony of facts or statements of opinion.

Requests for public meetings shall be in writing and shall state the action of the Director objected to, the questions to be considered, and the reasons the action is contested. Such requests should be addressed to:

Legal Records Section
Ohio Environmental Protection Agency
P.O. Box 1049
Columbus, Ohio 43216-1049

Interested persons are invited to submit written comments upon the discharge permit. Comments should be submitted in person or by mail no later than 30 days after the date of this Public Notice. Deliver or mail all comments to:

Ohio Environmental Protection Agency
Attention: Division of Surface Water
Permits and Compliance Section
P.O. Box 1049
Columbus, Ohio 43216-1049

The OEPA permit number and Public Notice numbers should appear on each page of any submitted comments. All comments received no later than 30 days after the date of the Public Notice will be considered.

Citizens may conduct file reviews regarding specific companies or sites. Appointments are necessary to conduct file reviews, because requests to review files have increased dramatically in recent years. The first 250 pages copied are free. For requests to copy more than 250 pages, there is a five-cent charge for each page copied. Payment is required by check or money order, made payable to Treasurer State of Ohio.

For additional information about this fact sheet or draft permit, contact Tomas Parry at (330) 963-1120 (tomas.parry@epa.state.oh.us) or Eric Nygaard at (614) 644-2024 (eric.nygaard@epa.state.oh.us).

Location of Discharge/Receiving Water Use Classification

The Girard WPCF discharges to the Little Squaw Creek at River Mile (RM) 0.4. The approximate location of the facility is shown in Figure 1.

This segment of the Little Squaw Creek is described by Ohio EPA River Code: 18-068, U.S. EPA River Reach #: 05030103-070, County: Trumbull, Ecoregion: Erie Drift Plain. The segment of the Mahoning River is described by Ohio EPA River Code: 18-001, U.S. EPA River Reach #: 05030103-001. Both the Little Squaw Creek and the Mahoning River are designated for the following uses under Ohio's Water Quality Standards (OAC 3745-1-25): Warmwater Habitat (WWH), Agricultural Water Supply (AWS), Industrial Water Supply (IWS), and Class B Primary Contact Recreation (PCR).

This downstream segment of the Mahoning River is described by Ohio EPA River Code: 18-001, U.S. EPA River Reach #: 05030103-070, County: Trumbull, Ecoregion: Erie-Ontario Lake Plain. The Mahoning River is designated for the

following uses under Ohio's Water Quality Standards (OAC 3745-1-25): Warmwater Habitat (WWH), Agricultural Water Supply (AWS), Industrial Water Supply (IWS), and Primary Contact Recreation (PCR) – Class A.

Use designations define the goals and expectations of a waterbody. These goals are set for aquatic life protection, recreation use and water supply use, and are defined in the Ohio WQS (OAC 3745-1-07). The use designations for individual waterbodies are listed in rules -08 through -32 of the Ohio WQS. Once the goals are set, numeric water quality standards are developed to protect these uses. Different uses have different water quality criteria.

Use designations for aquatic life protection include habitats for coldwater fish and macroinvertebrates, warmwater aquatic life and waters with exceptional communities of warmwater organisms. These uses all meet the goals of the federal Clean Water Act. Ohio WQS also include aquatic life use designations for waterbodies which can not meet the Clean Water Act goals because of human-caused conditions that can not be remedied without causing fundamental changes to land use and widespread economic impact. The dredging and clearing of some small streams to support agricultural or urban drainage is the most common of these conditions. These streams are given Modified Warmwater or Limited Resource Water designations.

Recreation uses are defined by the depth of the waterbody and the potential for wading or swimming. Uses are defined for bathing waters, swimming/canoeing (Primary Contact) and wading only (Secondary Contact - generally waters too shallow for swimming or canoeing).

Water supply uses are defined by the actual or potential use of the waterbody. Public Water Supply designations apply near existing water intakes so that waters are safe to drink with standard treatment. Most other waters are designated for agricultural and industrial water supply.

Facility Description

The Girard WPCF has an average daily design flow of 5.0 million gallons per day (MGD). The treatment plant was originally constructed in 1985, with the most recent modification occurring in 2000. Treatment plant processes include:

- Influent pumping;
- Primary settling/ trickling filter with plastic medium;
- Secondary clarification; and
- Chlorination/ de-chlorination.

Sludge processed by anaerobic digestion, and dewatered in a mechanical belt press. The sludge also undergoes digester gas utilization before ultimately being disposed of in a landfill. The process design capacity of the sewage sludge treatment system is 830 dry tons per year. In the past year, 159.084 dry tons of sludge was generated. The last major modification to the sewage sludge treatment system occurred in September of 2010.

Girard has a combined sewer system. The City submitted a long-term CSO control plan in 2002. While the control plan was never approved by Ohio EPA, the City completed projects to eliminate one CSO and in 2008 combined the two remaining CSOs into one outfall. There is currently one CSO in the system, outfall 003, that discharges to Little Squaw Creek. From January 2009 – December 2011, the City has reported two discharges from CSO 003.

The Girard wastewater plant has an internal bypass, station 602, that was used 10 times in 2010 and 44 times in 2011. The draft permit includes a compliance schedule for the City to conduct a no feasible alternatives analysis, submit a report in 12 months evaluating alternatives, costs and recommendations to eliminate the bypass, and complete implementation of the selective alternative by January 31, 2017, the expiration date of the permit.

The Girard WPCF has an Ohio EPA-approved industrial pretreatment program. However, there are currently no industrial users that discharge wastewater to the Girard WPCF.

Description of Existing Discharge

Table 1 presents chemical specific data compiled from the NPDES renewal application, data reported in annual pretreatment reports, and data collected by the Ohio EPA.

Table 2 presents a summary of unaltered Discharge Monitoring Report (DMR) data for outfall 001. Data are presented for the period January 2006-December 2011, and current permit limits are provided for comparison.

Table 5 summarizes the chemical specific data for outfall 001 by presenting the average and maximum Projected Effluent Quality (PEQ) values.

Tables 3 and 4 summarize the results of acute and chronic whole effluent toxicity tests of the final effluent.

Under the provisions of 40 CFR 122.21(j), the Director has waived the requirement for submittal of expanded effluent testing data as part of the NPDES renewal application. Ohio EPA has access to substantially identical information through the submission of annual pretreatment program reports and/or from effluent testing conducted by the Agency.

Assessment of Impact on Receiving Waters

The assessment of the Little Squaw Creek to the Mahoning River watershed, Hydrologic Unit Code (HUC) 05090101 01 03, comes from the 2010 Integrated Water Quality Monitoring and Assessment Report. Monitoring is scheduled for this watershed in 2013. The watershed use assessment evaluated four categories: aquatic life use assessment, recreational use assessment, public drinking water supply assessment, and fish tissue assessment.

Aquatic Life Use Assessment
Aquatic life use was placed into reporting category 5hx (impaired with historical data from a past Integrated Report). The sampling year for the aquatic life use assessment was 1994. The watershed was given a score of 0.0. The causes of impairment were direct habitat alterations, metals, nutrients, organic enrichment, dissolved oxygen, suspended solids, and unionized ammonia. The impairment was caused by dam construction and major municipal point sources.

Recreational Use Assessment
Recreational use was placed into reporting category 3 (use attainment unknown). No other information about recreational use was given.

Public Drinking Water Supply Assessment
The reporting category for drinking water supply assessment is not applicable to this location in the watershed. There are no known causes of impairment toward public drinking water supply. This watershed is not on the nitrate watch list or the pesticide watch list.

Fish Tissue Assessment
The reporting category for fish tissue is 5 (impaired, TMDL needed). The cause of impairment was PCBs (polychlorinated biphenyls). The PCB concentration in this watershed was 620 parts per billion.

A TMDL is scheduled for 2016.

The complete Ohio Integrated Report can be found at the following website:
http://www.epa.ohio.gov/dsw/tmdl/2010IntReport/2010OhioIntegratedReport.aspx

Development of Water-Quality-Based Effluent Limits

Determining appropriate effluent concentrations is a multiple step process in which parameters are identified as likely to be discharged by a facility, evaluated with respect to Ohio water quality criteria, and examined to determine the likelihood

that the existing effluent could violate the calculated limits. In addition, antidegradation and whole effluent toxicity issues must be addressed.

As in past modeling studies, all facilities discharging to the Mahoning River mainstem between the Leavittsburg dam and the Ohio-Pennsylvania boundary are considered interactive and are included in the wasteload allocation (WLA). The WLA contains a total of 23 outfalls from 6 municipal WWTPs and 7 industrial facilities, as follows:

Warren Steel Holdings (CSC Industries)	Thomas Steel Strip
RG Steel - Warren	ArcelorMittal-Warren
Warren WWTP	RMI-Niles
GenOn Niles Power	Niles WWTP
McDonald Steel	Campbell WWTP
Youngstown WWTP	Lowellville WWTP
Struthers WWTP	

Four dischargers located on tributaries are allocated separately from the mainstem discharges: Meander Creek WWTP (Meander Creek), Girard WWTP (Little Squaw Creek), Mosquito Creek WWTP (Mosquito Creek), and Boardman WWTP (Mill Creek). Travel time to and distance from the Mahoning River are considered large enough that, for modeling purposes, the effluents from the respective treatment plants are considered non-interactive with the direct dischargers to the Mahoning. Effluents from these four treatment plants were allocated to meet water quality standards for the conditions, habitat, and use designation for their particular receiving waters and separate Permit Support Documents were prepared for each facility. Monitoring was conducted downstream of these dischargers or at the mouths of these tributaries, however, for inputs into the Mahoning River mainstem model.

A schematic representation of the study area can be found in Figure 2.

Parameter Selection Effluent data for the Girard WWTP were used to determine what parameters should undergo wasteload allocation. The sources of effluent data are as follows:

Self-monitoring data (DMRs)	January 2006 through September 2011
Ohio EPA data and Pretreatment program	2006 - 2011

The effluent data were checked for outliers and the following values were eliminated from the data set: for total dissolved solids, 13 values ranging from 14. to 28. mg/L which appear to be reporting errors; for nickel, two values of 289. and 193. µg/L; for silver, one value of 4.0 µg/L and one value for iron of 1660. µg/L.

The average and maximum projected effluent quality (PEQ) values are presented in Table 5. For a summary of the screening results, refer to the parameter groupings in Table 9.

Wasteload Allocation For those parameters that require a wasteload allocation (WLA), the results are based on the uses assigned to the receiving waterbody in OAC 3745-1. The applicable waterbody uses for this facility's discharge and the associated stream design flows are as follows:

Aquatic life (WWH)		
Toxics (metals, organics, etc.)	Average	Annual 7Q10
	Maximum	Annual 1Q10
Ammonia-N	Average	Summer/winter 30Q10
Agricultural Water Supply		Harmonic mean flow
Human Health (nondrinking)		Harmonic mean flow

Allocations are developed using a percentage of stream design flow (as specified in Table 7), and allocations cannot exceed the Inside Mixing Zone Maximum criteria.

Beginning in November 2010, the use of mixing zones to determine the waste load allocation for bioaccumulative chemicals of concern (BCCs) is no longer allowed. This means that limits for BCCs after November 2010 must meet water quality standards with no allowances for dilution. Since mercury is considered a BCC, discharges must comply with water quality standards at the discharge point. In order to obtain mercury effluent data which can be compared to the water quality standards, the permittee must use a low level method for mercury sampling and analysis.

The data used in the WLA are listed in Tables 6 and 7. The wasteload allocation results to maintain all applicable criteria are presented in Table 8.

Reasonable Potential The preliminary effluent limits are the lowest average WLA (average PEL) and the maximum WLA (maximum PEL). To determine the reasonable potential of the discharger to exceed the WLA for each parameter, the facility's effluent quality is compared to the preliminary effluent limits. The average PEQ value (Table 1) is compared to the average PEL, and the maximum PEQ value is compared to the maximum PEL. Based on the calculated percentage of the respective average and maximum comparisons, the parameters are assigned to "groups", as listed in Table 9.

Whole Effluent Toxicity WLA Whole effluent toxicity (WET) is the total toxic effect of an effluent on aquatic life measured directly with a toxicity test. Acute WET measures short term effects of the effluent while chronic WET measures longer term and potentially more subtle effects of the effluent.

Water quality standards for WET are expressed in Ohio's narrative "free from" WQS rule [OAC 3745-1-04(D)]. These "free froms" are translated into toxicity units (TUs) by the associated WQS Implementation Rule (OAC 3745-2-09). Wasteload allocations can then be calculated using TUs as if they were water quality criteria.

The wasteload allocation calculations for WET are similar to those for aquatic life criteria - using the chronic toxicity unit (TU_c) and 7Q10 flow for the average and the acute toxicity unit (TU_a) and 1Q10 flow for the maximum. These values are the levels of effluent toxicity that should not cause instream toxicity during critical low-flow conditions. For Girard WPCF, the wasteload allocation values are 0.3 TU_a and 1.0 TU_c.

The chronic toxicity unit (TU_c) is defined as 100 divided by the IC_{25}:

$$TU_c = 100/IC_{25}$$

This equation applies outside the mixing zone for warmwater, modified warmwater, exceptional warmwater, coldwater, and seasonal salmonid use designations except when the following equation is more restrictive (Ceriodaphnia dubia only):

$$TU_c = 100/\text{geometric mean of NOEC and LOEC}$$

The acute toxicity unit (TU_a) is defined as 100 divided by the LC_{50} for the most sensitive test species:

$$TU_a = 100/LC_{50}$$

This equation applies outside the mixing zone for warmwater, modified warmwater, exceptional warmwater, coldwater, and seasonal salmonid use designations.

When the acute wasteload allocation is less than 1.0 TU_a, it may be defined as:

Dilution Ratio (downstream flow to discharger flow)	Allowable Effluent Toxicity (percent effects in 100% effluent)
up to 2 to 1	30
greater than 2 to 1 but less than 2.7 to 1	40
2.7 to 1 to 3.3 to 1	50

The acute wasteload allocation for the Girard WPCF is 30 percent mortality in 100 percent effluent based on the dilution ratio of less than 1 to 1.

Reasonable Potential/ Effluent Limits/Hazard Management Decisions

After appropriate effluent limits are calculated, the reasonable potential of the discharger to violate the water quality standards must be determined. Each parameter is examined and placed in a defined "group". Parameters that do not have a water quality standard or do not require a wasteload allocation based on the initial screening are assigned to either group 1 or 2. For the allocated parameters, the preliminary effluent limits (PEL) based on the most restrictive average and maximum wasteload allocations are selected from Table 8. The average PEL (PEL_{avg}) is compared to the average PEQ (PEQ_{avg}) from Table 5 and the PEL_{max} is compared to the PEQ_{max}. Based on the calculated percentage of the allocated value [($PEQ_{avg} \div PEL_{avg}$) X 100, or ($PEQ_{max} \div PEL_{max}$) X 100)], the parameters are assigned to group 3, 4, or 5. The groupings are listed in Table 9.

The final effluent limits are determined by evaluating the groupings in conjunction with other applicable rules and regulations. Table 10 presents the final effluent limits and monitoring requirements proposed for Girard WPCF outfall 001 and the basis for their recommendation.

The limits recommended for suspended solids and $CBOD_5$ are technology-based treatment standards included in 40 CFR Part 133, Secondary Treatment Regulation. Secondary treatment is defined by the Best Practicable Waste Treatment Technology criteria, which are required of all publicly owned treatment works discharging to effluent limited stream segments (with respect to conventional pollutants.

Limits proposed for dissolved oxygen, oil and grease, pH, and e. coliform are based on Water Quality Standards (OAC 3745-1-07).). *E. coli* limits and monitoring are replacing fecal coliform limits and monitoring due to new water quality standards. WQS for bacteria are based on e. coliform rather than fecal coliform. The permit contains a 12-month compliance schedule to allow time for Girard to meet this limit; it is not clear whether the discharge can currently meet the new WQS.

Based on best engineering judgment, Ohio EPA is proposing that the existing monitoring requirement for ammonia-nitrogen be continued instead of imposing the water quality based effluent limit from Table 9. In most previous water quality models, the Girard WPCF, which is a secondary treatment trickling filter plant, was considered a direct discharger to the Mahoning Riiver. Based on the critical flows and background water quality of the Mahoning River, secondary treatment limits for CBOD5 and total suspended solids and monitoring of ammonia-N were appropriate.

The current modeling for the Girard plant (Tables 6, 7 and 8) used the critical flows and background water quality of Little Squaw Creek, and this resulted in preliminary monthly average effluent limits for ammonia-N of 1.4 mg/l (summer) and 1.9 mg/l (winter). The WPCF currently meets these limits less than half of the time, meaning that the City would need to upgrade the plant to consistently meet these limits.

The Girard WPCF discharges to Little Squaw Creek at river mile 0.4. Just downstream of the Girard discharge, the creek flows into a 2000-foot culvert, which ends at the confluence with the Mahoning River. At this time, the Agency does not believe it is reasonable to issue a permit that would require the City to undertake a costly plant upgrade to meet ammonia-N limits calculated to protect 2000 feet of a culverted stream. The Agency does believe that it is important to issue a

permit that protects fish passage through the culvert into Little Squaw Creek by addressing acute toxicity in the Girard discharge.

The Ohio EPA risk assessment (Table 9) places bis-2ethylhexylphthalate, chlorine, copper, cyanide, lead and mercury in group 5. This placement as well as the data in Tables 1, 2 and 5 indicate that the reasonable potential to exceed WQS exists and limits are necessary to protect water quality. For these parameters PEQ is greater than 75% percent of the wasteload allocation. Pollutants that meet this requirement must have permit limits under OAC Rule 3745-33-07(A)(1).

The limits for bis-2EHP (maximum), chlorine, cyanide, lead and mercury (average) are based on the current wasteload allocation. These limits were derived to protect WQS in Little Squaw Creek. The limits for bis-2EHP (average), copper and mercury (maximum) are based on Ohio's Antibacksliding Rule [OAC 3745-33-05(F)]. These limits are more restrictive than the current wasteload allocation, and Girard did not request additional loading in their application.

The Ohio EPA risk assessment (Table 9) places dissolved solids (TDS), hexavalent chromium, iron, silver and zinc in group 4. This placement as well as the data in Tables 1, 2 and 5 support that these parameters do not have the reasonable potential to contribute to WQS exceedances, and limits are not necessary to protect water quality. Monitoring for Group 4 pollutants (where PEQ exceeds 50 percent of the WLA) is required by OAC Rule 3745-33-07(A)(2).

Based on best engineering judgment, once every two weeks monitoring is proposed for total filterable residue (total dissolved solids).

Ohio EPA evaluated instream total dissolved solids (TDS) data collected in the Mahoning River at Lowellville, approximately one mile from the Ohio-Pennsylvania border (n = 128, range = 164 – 650 mg/l, period of record = January 1999 – January 2012). The Agency calculated summer and winter concentrations to characterize instream TDS levels. These concentrations are 95th percentiles of the monthly averages and daily values of the data. The calculated values are: monthly average – 364 mg/l (S), 456 mg/l (W); maximum – 423 mg/l (S), 587 mg/l (W).

These values are lower than the monthly average and maximum Pennsylvania TDS standards, 500 mg/l and 750 mg/l. This demonstrates that currently there is not reasonable potential for the instream TDS concentration to exceed the Pennsylvania standards at Lowellville, close to the state line. Based on this finding, water quality based effluent limits for TDS are not currently necessary for Ohio wastewater facilities discharging at their existing TDS loads.

Ohio EPA is pursuing a plan to begin regular TDS monitoring at a site in the lower part of the Mahoning River in Ohio. This monitoring would provide additional baseline data on ambient TDS concentrations with Ohio facilities discharging at their existing TDS loads. The Agency will consider options for reducing the TDS load to the Mahoning River if an upward trend in the ambient concentration is observed

Ohio EPA will evaluate proposals for new or increased TDS loadings to the Mahoning River from Ohio NPDES dischargers, which could be subject to provisions of Ohio's antidegradation rule (OAC 3745-1-05).

Ohio EPA risk assessment (Table 9) places cadmium, chromium and nickel in groups 2/3. This placement as well as the data in Tables 1, 2 and 5 support that these parameters do not have the reasonable potential to contribute to WQS exceedances, and limits are not necessary to protect water quality. Monitoring at a low frequency is proposed to document that these pollutants continue to remain at low levels.

The *2010 Ohio Integrated Water Quality Monitoring and Assessment Report* (Ohio EPA) lists the Mahoning River as impaired for aquatic life. Nutrients and organic enrichment/dissolved oxygen are listed as causes, and major municipal point sources are listed among the "high magnitude" sources. Considering this information and the fact that municipal wastewater treatment plants discharge a nutrient load to the river, monthly monitoring for phosphorus, nitrate + nitrite and total Kjeldahl nitrogen is proposed based on best engineering judgment. Monitoring for phosphorus and nitrate + nitrite at the upstream and downstream stations also is proposed. The purpose of the monitoring is to maintain a nutrient data set for use in the future TMDL (total maximum daily loads) study.

Limits and monitoring requirements proposed for the disposal of sewage sludge by the following management practices are based on OAC 3745-40: removal to sanitary landfill.

Additional monitoring requirements proposed at the final effluent, influent and upstream/downstream stations are included for all facilities in Ohio and vary according to the type and size of the discharge. In addition to permit compliance, this data is used to assist in the evaluation of effluent quality and treatment plant performance and for designing plant improvements and conducting future stream studies.

Whole Effluent Toxicity Reasonable Potential
Based on evaluating the whole effluent toxicity data presented in Tables 3 and 4 and other pertinent data under the provisions of OAC 3745-33-07(B), the Girard wastewater treatment plant is placed in Category 4 with respect to whole effluent toxicity. None of the five chronic toxicity tests, and only one of twenty acute tests showed toxicity in the effluent. This one result does not appear to be characteristic of the discharge.

The draft permit would continue quarterly acute toxicity monitoring and limits for the life of the permit. The limits would be retained to ensure continued fish passage through lower Little Squaw Creek. While test results indicate that the plant's effluent does not currently pose a toxicity problem, the reported effluent data for ammonia indicate that acute toxicity is a real possibility under certain conditions. Annual chronic toxicity testing is proposed consistent with the minimum monitoring requirements at OAC 3754-33-07(B)(11). The proposed monitoring will adequately characterize toxicity in the plant's effluent.

Other Requirements

Sanitary Sewer Overflow Reporting
Provisions for reporting sanitary sewer overflows (SSOs) are also proposed in this permit. These provisions include: the reporting of the system-wide number of SSO occurrences on monthly operating reports; telephone notification of Ohio EPA and the local health department, and 5-day follow up written reports for certain high risk SSOs; and preparation of an annual report that is submitted to Ohio EPA and made available to the public. Many of these provisions were already required under the “Noncompliance Notification”, “Records Retention”, and “Facility Operation and Quality Control” general conditions in Part III of Ohio NPDES permits.

Operator Certification
Operator certification requirements have been included in Part II, Item A of the permit in accordance with rules adopted in December 2006. These rules require the Girard WPCF to have a Class III wastewater treatment plant operator in charge of the sewage treatment plant operations discharging through outfall 001.

Operator of Record
In December 2006, Ohio Administrative Code rule revisions became effective which affect the requirements for certified operators for sewage collection systems and treatment works regulated under NPDES permits. Part II, Item A of this NPDES permit represents language necessary to implement rule 3745-7-02 of the Ohio Administrative Code (OAC), and requires the permittee to designate one or more operator of record to oversee the technical operation of the sewerage system.

Storm Water Compliance
Parts IV, V, and VI have been included with the draft permit in order to ensure that any storm water flows from the facility site are properly regulated and managed. As an alternative to complying with Parts IV, V, and VI, the Girard WPCF may seek permit coverage under the general permit for industrial stormwater (permit # OHR000004) or submit a “No Exposure Certification.” Parts IV, V, and VI will be removed from the final permit if: 1) the Girard WPCF submits a Notice of Intent (NOI) for coverage under the general permit for industrial stormwater or submits a No Exposure Certification, 2) Ohio EPA determines that the facility is eligible for coverage under the general permit or meets the requirements for a No Exposure Certification, and 3) the determination by Ohio EPA can be made prior to the issuance of the final permit.

Outfall Signage

Part II of the permit includes requirements for signs to be placed at each outfall to the Little Squaw Creek, providing information about the discharge. Signage at outfalls is required pursuant to Ohio Administrative Code 3745-33-08(A).

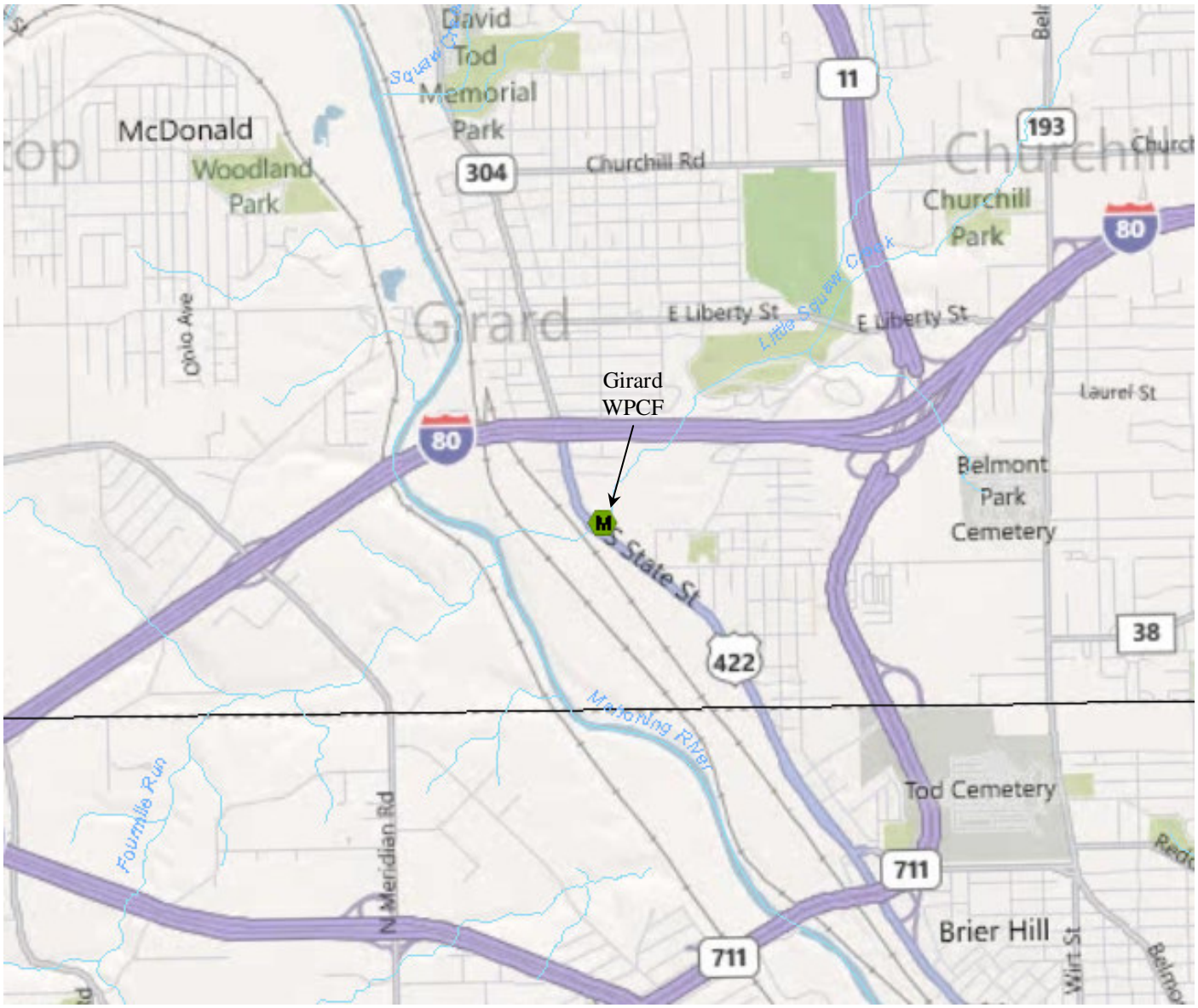

Figure 1. Approximate Location of Girard WPCF

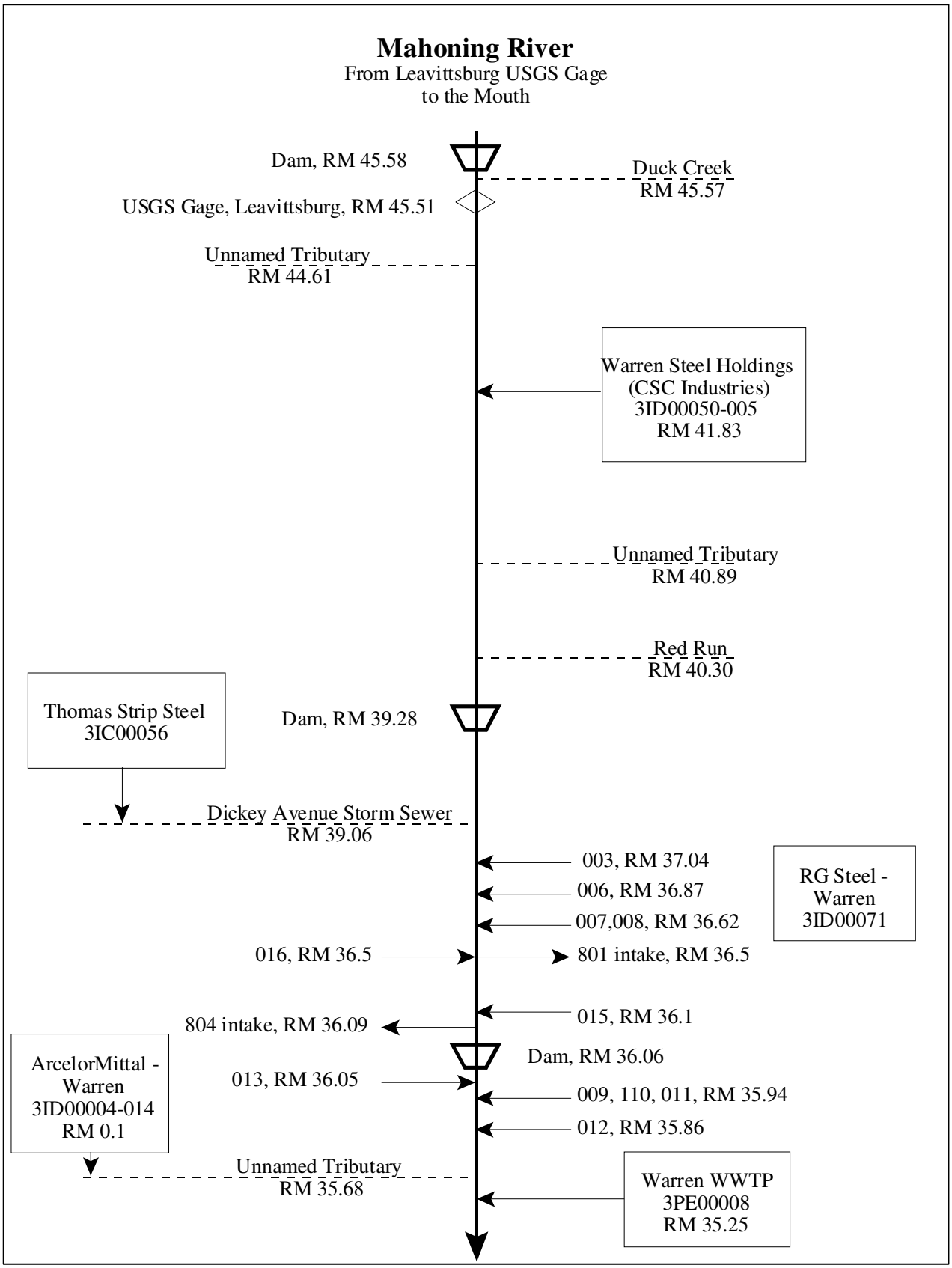
Mahoning River
From Leavittsburg USGS Gage
to the Mouth
Dam, RM 45.58
Duck Creek
RM 45.57
USGS Gage, Leavittsburg, RM 45.51
Unnamed Tributary
RM 44.61
Warren Steel Holdings
(CSC Industries)
3ID00050-005
RM 41.83
Unnamed Tributary
RM 40.89
Red Run
RM 40.30
Thomas Strip Steel
3IC00056
Dam, RM 39.28
Dickey Avenue Storm Sewer
RM 39.06
003, RM 37.04
006, RM 36.87
007,008, RM 36.62
RG Steel -
Warren
3ID00071
016, RM 36.5
801 intake, RM 36.5
015, RM 36.1
804 intake, RM 36.09
Dam, RM 36.06
ArcelorMittal -
Warren
3ID00004-014
RM 0.1
013, RM 36.05
009, 110, 011, RM 35.94
012, RM 35.86
Unnamed Tributary
RM 35.68
Warren WWTP
3PE00008
RM 35.25

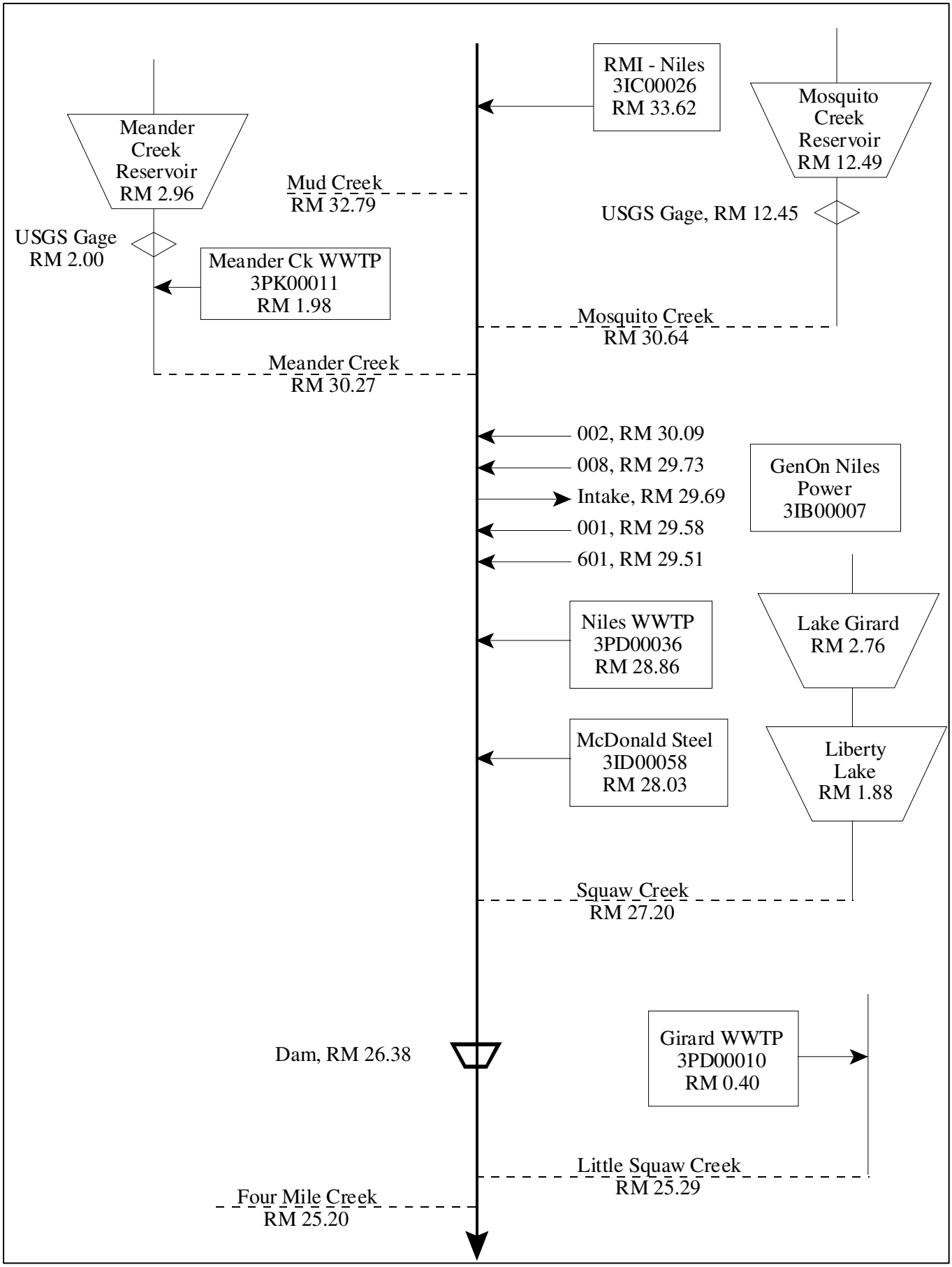
RMI - Niles
3IC00026
RM 33.62
Mosquito
Creek
Reservoir
RM 12.49
Meander
Creek
Reservoir
RM 2.96
Mud Creek
RM 32.79
USGS Gage, RM 12.45
USGS Gage
RM 2.00
Meander Ck WWTP
3PK00011
RM 1.98
Mosquito Creek
RM 30.64
Meander Creek
RM 30.27
002, RM 30.09
008, RM 29.73
Intake, RM 29.69
001, RM 29.58
601, RM 29.51
GenOn Niles
Power
3IB00007
Niles WWTP
3PD00036
RM 28.86
Lake Girard
RM 2.76
McDonald Steel
3ID00058
RM 28.03
Liberty
Lake
RM 1.88
Squaw Creek
RM 27.20
Dam, RM 26.38
Girard WWTP
3PD00010
RM 0.40
Little Squaw Creek
RM 25.29
Four Mile Creek
RM 25.20

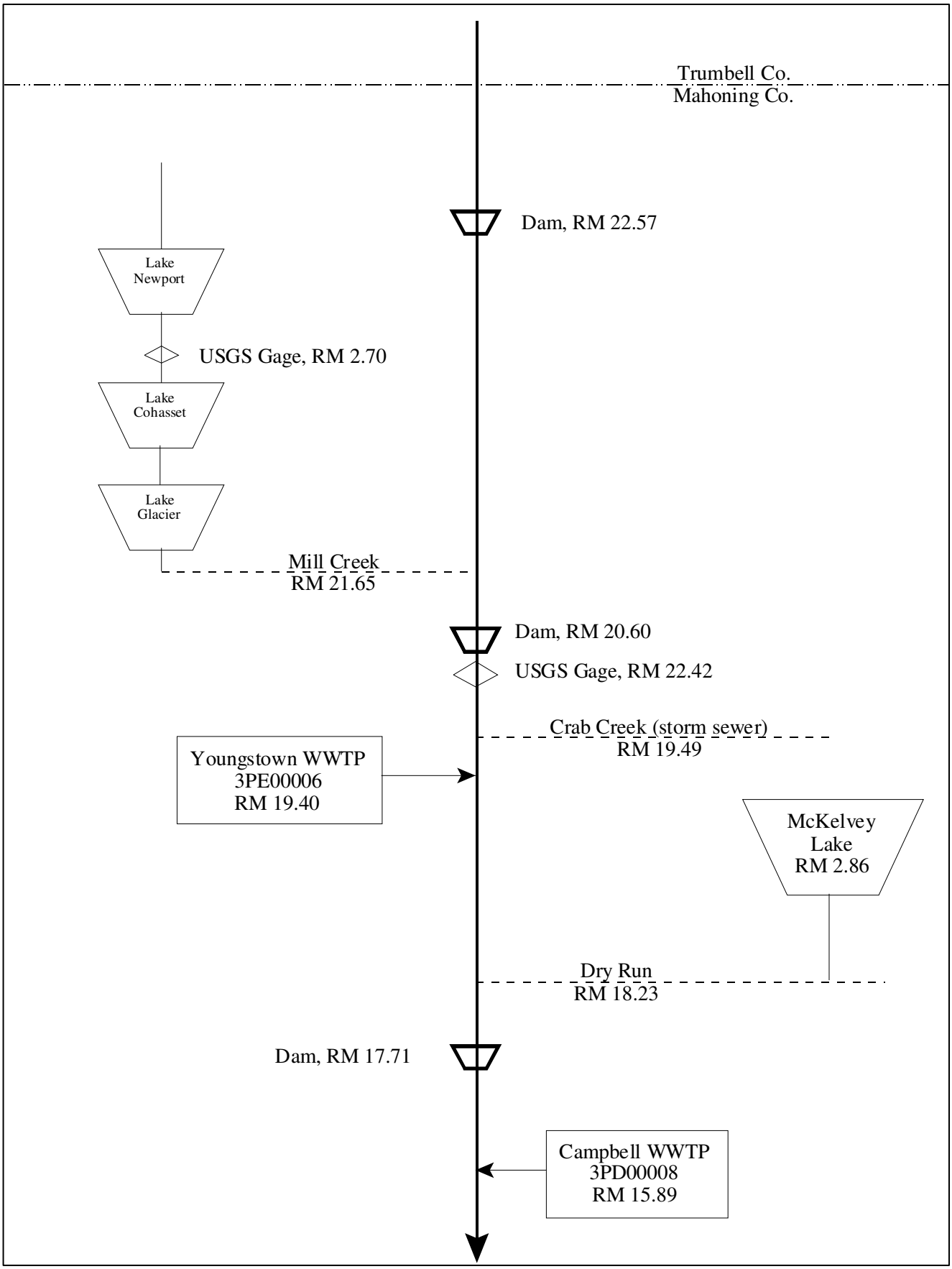
Trumbell Co.
Mahoning Co.
Dam, RM 22.57
Lake Newport
USGS Gage, RM 2.70
Lake Cohasset
Lake Glacier
Mill Creek
RM 21.65
Dam, RM 20.60
USGS Gage, RM 22.42
Crab Creek (storm sewer)
RM 19.49
Youngstown WWTP
3PE00006
RM 19.40
McKelvey Lake
RM 2.86
Dry Run
RM 18.23
Dam, RM 17.71
Campbell WWTP
3PD00008
RM 15.89

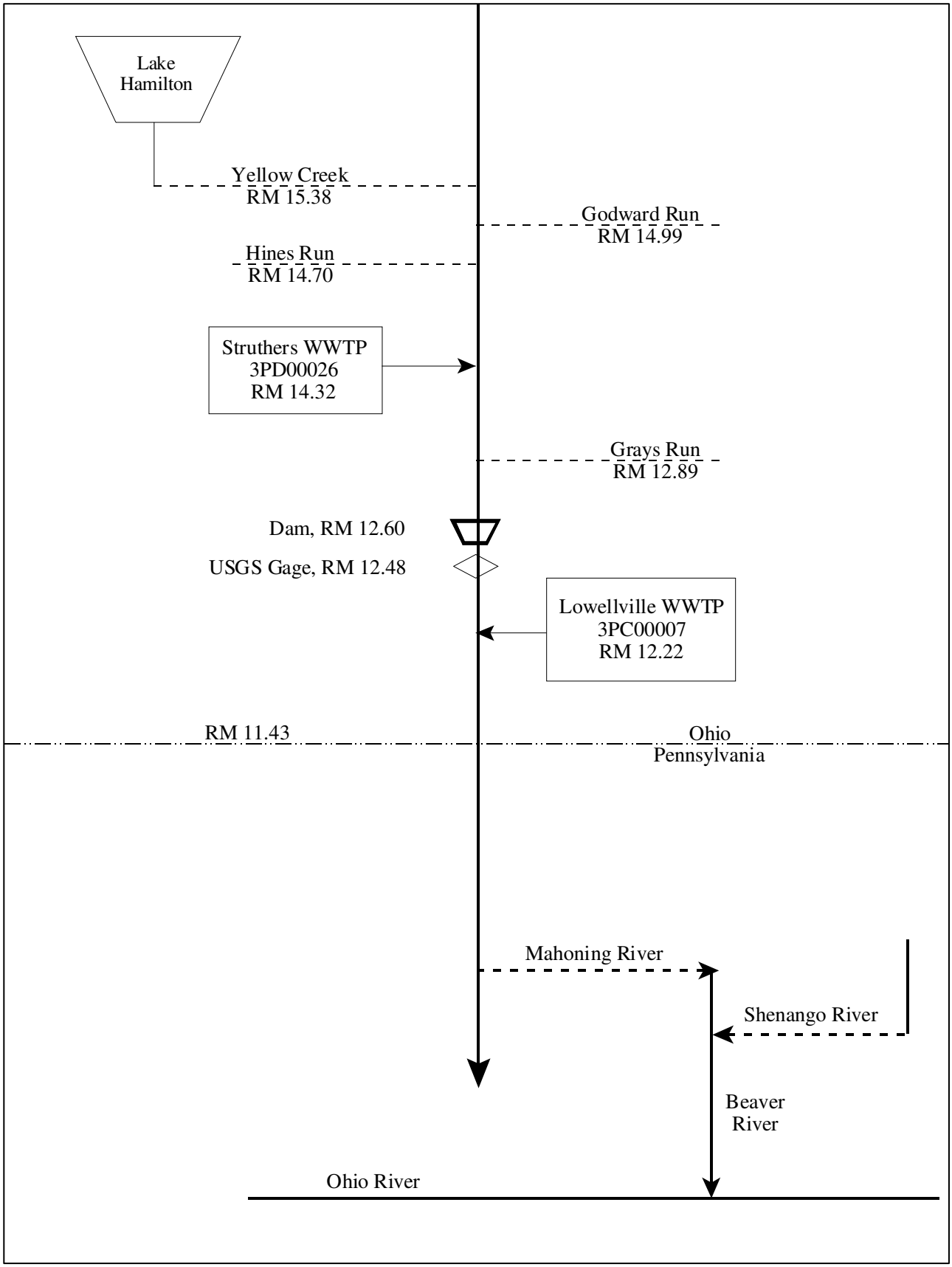

Figure 2. Lower Mahoning River Study Area

Table 1. Effluent Characterization Based on Pretreatment Data and Ohio EPA Data

Summary of analytical results for the Girard WPCF outfall 001. PT = data from, pretreatment program reports; OEPA = data from analyses by Ohio EPA; ND = below detection (detection limit); NA = not analyzed. Decision Criteria: PEQ_{avg} = monthly averages; PEQ_{max} = daily maximum analytical results.

PARAMETER	OEPA 10/19/10	OEPA 6/7/10	PT 1/26/11	PT 8/24/09	PT 9/7/08	PT 9/24/07	PT 9/12/06
Arsenic (ug/l)	2.6	2.4	ND(25)	ND(25)	ND(25)	ND(25)	ND(25)
Barium (ug/l)	18	23	NA	NA	NA	NA	NA
Beryllium (ug/l)	NA	NA	ND(1.5)	ND(1.5)	2.08	ND(1.5)	ND(1.5)
Cadmium (ug/l)	0.62	ND(0.20)	ND(5)	ND(5)	ND(5)	ND(5)	ND(5)
Chloride (mg/l)	157	162	NA	NA	NA	NA	NA
Chromium (ug/l)	2.5	2.1	ND(5)	ND(5)	ND(5)	ND(5)	ND(5)
Copper (ug/l)	12.6	9.7	16.1	ND(10)	11.7	15.1	ND(5)
Dissolved solids, Total (mg/l)	626	634	NA	NA	NA	NA	NA
Iron (ug/l)	559	1660	NA	NA	NA	NA	NA
Lead (ug/l)	ND(2.0)	ND(2.0)	ND(15)	ND(15)	25.2	ND(15)	ND(15)
Nickel (ug/l)	3.7	4.2	ND(10)	16.4	ND(10)	12.9	23.3
Nitrite+Nitrate-N (mg/l)	15.6	12.6	NA	NA	NA	NA	NA
Phosphorus, Total (mg/l)	3.73	1.88	NA	NA	NA	NA	NA
Strontium (ug/l)	224	245	NA	NA	NA	NA	NA
Zinc (ug/l)	37	27	33.3	35	43.3	173	36.7
Bis(2-ethylhexyl) phthalate (ug/l)	ND(10.2)	ND(10.6)	ND(10)	14.3	ND(10)	ND(10)	35
Chloroform (ug/l)	ND(0.50)	0.70	ND(5)	ND(5)	ND(5)	ND(5)	ND(5)
Toluene (ug/l)	0.72	0.93	ND(5)	ND(5)	ND(5)	ND(5)	ND(5)

Table 2. Effluent Characterization Based on Self Monitoring Data

Summary of current permit limits and unaltered monthly operating report (MOR) data for Girard WPCF outfall ___. All values are based on annual records unless otherwise indicated. N = Number of Analyses. * = For pH, 5th percentile shown in place of 50th percentile; ** = For dissolved oxygen, 5th percentile shown in place of 95th percentile; A = 7 day average. Decision Criteria: PEQ_{avg} = monthly average; PEQ_{max} = daily maximum analytical results.

Parameter	Season	Units	Current Permit Limits		# Obs.	Percentiles		Data Range	Decision Criteria		
			30 day	Daily		50th	95th		# Obs.	PEQ_{ave}	PEQ_{max}
Outfall 001											
Water Temperature	Annual	C	Monitor		1518	14.7	20.8	3.8-25			
Dissolved Oxygen	Summer	mg/l	--	5.0 (min.)	776	6.95	8.8	4.9-18.5			
Dissolved Oxygen	Winter	mg/l	--	5.0 (min.)	743	8.6	11	5-13.5			
Chemical Oxygen Demand (Low Level)	Annual	mg/l	--	--	30	54.2	78.5	25.5-131			
Chemical Oxygen Demand (Low Level)	Annual	kg/day	--	--	30	686	1350	335-1800			
Residue, Total Dissolved	Annual	mg/l	--	--	41	510	738	4.14-908	30	778	1005
Residue, Total Dissolved	Annual	kg/day	--	--	41	5880	14400	71.8-17600			
Total Suspended Solids	Annual	mg/l	30	45A	865	17	44	0-201			
Total Suspended Solids	Annual	kg/day	568	852	865	201	818	0-4120			
Oil and Grease, Total	Annual	mg/l	--	--	62	5.48	13.8	0-860			
Oil and Grease, Total	Annual	kg/day	--	--	62	76.9	187	0-14500			
Oil and Grease, Hexane Extr Method	Annual	mg/l	--	10	89	4.3	10.5	0-24			
Oil and Grease, Hexane Extr Method	Annual	kg/day	--	--	89	48.7	186	0-276			
Nitrogen, Ammonia (NH3)	Summer	mg/l	Monitor		427	2.22	7.68	0-24.7	292	5.565	11.71
Nitrogen, Ammonia (NH3)	Winter	mg/l	Monitor		420	1.99	9.13	0-23.7	204	4.084	8.526
Nitrogen, Ammonia (NH3)	Summer	kg/day	--	--	427	26.4	94.9	0-377			
Nitrogen, Ammonia (NH3)	Winter	kg/day	--	--	420	26.6	118	0-372			

Nitrogen Kjeldahl, Total	Annual	mg/l	Monitor		84	3.49	9.86	0.822-18.5			
Nitrogen Kjeldahl, Total	Annual	kg/day	--	--	84	41.5	145	0.659-242			
Nitrite Plus Nitrate, Total	Annual	mg/l	Monitor		73	9.58	16.9	0-23.6	72	15.51	21.24
Nitrite Plus Nitrate, Total	Annual	kg/day	--	--	73	120	220	0-299			
Phosphorus, Total (P)	Annual	mg/l	Monitor		288	1.94	3.83	0-7.96	278	3.711	5.405
Phosphorus, Total (P)	Annual	kg/day	--	--	288	25.9	48.6	0-73.3			
Cyanide, Free	Annual	mg/l	Monitor		45	0	0	0-0.03	37	0.024	0.033
Cyanide, Free	Annual	kg/day	--	--	45	0	0	0-0.428			
Nickel, Total Recoverable	Annual	ug/l	Monitor		45	0	32.8	0-289	49	24.0	32.9
Nickel, Total Recoverable	Annual	kg/day	--	--	45	0	0.6	0-2.77			
Silver, Total Recoverable	Annual	ug/l	1.3	7.5	52	0	0	0-4	32	0.803	1.1
Silver, Total Recoverable	Annual	kg/day	0.025	0.14	52	0	0	0-0.0654			
Strontium, Total (Sr)	Annual	ug/l	--	--	30	206	264	167-283	32	247.8	287.2
Strontium, Total (Sr)	Annual	kg/day	--	--	30	2.84	6.02	1.26-6.65			
Zinc, Total Recoverable	Annual	ug/l	Monitor		73	44.2	144	0-375	77	115.9	176.5
Zinc, Total Recoverable	Annual	kg/day	--	--	73	0.642	1.71	0-4.39			
Cadmium, Total Recoverable	Annual	ug/l	Monitor		45	0	0	0-0.94	38	0.755	1.034
Cadmium, Total Recoverable	Annual	kg/day	--	--	45	0	0	0-0.00988			
Lead, Total Recoverable	Annual	ug/l	Monitor		45	0	0	0-29	51	21.17	29.0
Lead, Total Recoverable	Annual	kg/day	--	--	45	0	0	0-0.329			
Chromium, Total Recoverable	Annual	ug/l	Monitor		45	0	5.33	0-6.56	51	4.029	6.265
Chromium, Total Recoverable	Annual	kg/day	--	--	45	0	0.0514	0-0.0829			
Copper, Total Recoverable	Annual	ug/l	20	33	76	10.4	23.3	0-69.6	80	21.03	32.07
Copper, Total Recoverable	Annual	kg/day	0.38	0.63	76	0.0855	0.38	0-0.884			
Chromium, Dissolved Hexavalent	Annual	ug/l	Monitor		44	0	0	0-5.43	35	4.757	6.516
Chromium, Dissolved Hexavalent	Annual	kg/day	--	--	44	0	0	0-0.0813			
Fecal Coliform	Annual	#/100 ml	1000	2000	462	37.9	295	0-53000			
Bis(2-ethylhexyl) Phthalate	Annual	ug/l	1.8	1100	31	0	30.6	0-37	36	29.71	40.70
Bis(2-ethylhexyl) Phthalate	Annual	kg/day	0.034	20.8	31	0	0.428	0-0.436			
Flow Rate	Annual	MGD	Monitor		2191	3.24	6.76	0.024-13.4			

Chlorine, Total Residual	Annual	mg/l	--	0.019	780	0.001	0.0172	0-0.16	758	0.0082	0.0181
Chlorine, Total Residual	Annual	kg/day	--	--	780	0.0103	0.229	0-2.67			
Mercury, Total (Low Level)	Annual	ng/l	36	1100	83	12	29.3	0-60.8	79	24.53	36.09
Mercury, Total (Low Level)	Annual	kg/day	0.0007	0.02	83	0.000156	0.000542	0-0.00309			
Acute Toxicity, Ceriodaphnia dubia	Annual	TUa	--	1.0	20	0	0.345	0-5			
Chronic Toxicity, Ceriodaphnia dubia	Annual	TUc	Monitor		5	0	0.8	0-1			
Acute Toxicity, Pimephales promelas	Annual	TUa	--	1.0	20	0	0.1	0-0.1			
Chronic Toxicity, Pimephales promelas	Annual	TUc	Monitor		5	0	0.81	0-1			
48-Hr. Acute Toxicity Ceriodaphnia dubia	Annual	% Affected	--	--	3	0	0.09	0-0.1			
96-Hr. Acute Toxicity Daphnia pulex	Annual	% Affected	--	--	2	0	0	0-0			
96-Hr. Acute Toxicity Pimephales promela	Annual	% Affected	--	--	1	0.1	0.1	0.1-0.1			
pH, Maximum	Annual	S.U.	--	9.0	1687	7.64	8.02	6.87-8.38			
pH, Minimum	Annual	S.U.	--	6.5	1686	7.48	7.82	6.68-8.14			
CBOD 5 day	Summer	mg/l	25	40	438	11.6	24.4	4.3-77			
CBOD 5 day	Winter	mg/l	25	40	425	11.5	23.2	3.5-40			
CBOD 5 day	Summer	kg/day	473	757	438	137	376	36.4-1030			
CBOD 5 day	Winter	kg/day	473	757	425	154	426	1.19-1300			

Table 3. Summary of Acute Toxicity Test Results

Test Date(a)	*Ceriodaphnia dubia 48 hours*						*Fathead Minnows 96 hour*					
	UP[b]	C[c]	LC_{50}[d]	%M[g]	TUa[h]	NF[i]	UP[b]	C[c]	LC_{50}[d]	%M[g]	TUa[h]	NF[i]
10/1/2006 (E)	0	NR	>100	0	<1.0	0	5	NR	>100	0	<1.0	10
12/26/2006 (E)	0	NR	>100	0	<1.0	0	0	NR	>100	10	<1.0	0
4/1/2007 (E)	0	NR	>100	0	<1.0	0	0	NR	>100	0	<1.0	0
10/1/2007 (E)	0	NR	>100	0	<1.0	20	0	NR	>100	0	<1.0	65
12/5/2007 (E)	0	NR	>100	0	<1.0	0	0	NR	>100	0	<1.0	0
4/1/2008 (E)	0	NR	>100	0	<1.0	NT	0	NR	>100	0	<1.0	NT
8/19/2008 (E)	0	NR	>100	0	<1.0	NT	0	NR	>100	10	<1.0	NT
12/9/2008 (E)	0	NR	>100	0	<1.0	NT	0	NR	>100	0	<1.0	NT
3/30/2009 (E)	45	NR	>100	0	<1.0	NT	0	NR	>100	0	<1.0	NT
6/12/2009 (E)	0	NR	20	100	5	NT	0	NR	>100	0	<1.0	NT

[a] O = EPA test; E = entity test
[b] UP = upstream control water
[c] C = laboratory water control
[d] LC_{50} = median lethal concentration
NT = not tested

[g] %M = percent mortality in 100% effluent
[h] TUa = acute toxicity units
[i] NF = near field sample in the Mahoning River
NR = not reported in OEPA database

Table 3. Summary of Acute Toxicity Test Results - continued

Test Date(a)	*Ceriodaphnia dubia 48 hours*						*Fathead Minnows 96 hour*					
	UP[b]	C[c]	LC_{50}[d]	%M[g]	TUa[h]	NF[i]	UP[b]	C[c]	LC_{50}[d]	%M[g]	TUa[h]	NF[i]
8/4/2009 (E)	0	NR	>100	0	<1.0	NT	0	NR	>100	0	<1.0	NT
12/2/2009 (E)	0	NR	>100	0	<1.0	NT	30	NR	>100	10	<1.0	NT
3/2/2010 (E)	0	NR	>100	0	<1.0	NT	0	NR	>100	0	<1.0	NT
6/10/2010 (E)	0	NR	>100	0	<1.0	NT	2.5	NR	>100	5	<1.0	NT
8/3/2010 (E)	5	NR	>100	10	<1.0	NT	5	NR	>100	10	<1.0	NT
12/1/2010 (E)	0	NR	>100	0	<1.0	NT	10	NR	>100	0	<1.0	NT
3/6/2011 (E)	5	NR	>100	0	<1.0	NT	0	NR	>100	0	<1.0	NT
6/5/2011 (E)	0	NR	>100	0	<1.0	NT	2.5	NR	>100	0	<1.0	NT
8/2/2011 (E)	0	NR	>100	0	<1.0	NT	5	NR	>100	0	<1.0	NT
12/4/2011 (E)	10	NR	>100	0	<1.0	NT	0	NR	>100	0	<1.0	NT

[a] O = EPA test; E = entity test
[b] UP = upstream control water
[c] C = laboratory water control
[d] LC_{50} = median lethal concentration
NT = not tested

[g] %M = percent mortality in 100% effluent
[h] TUa = acute toxicity units
[i] NF = near field sample in the Mahoning River
NR = not reported in OEPA database

Table 4. Summary of Chronic Toxicity Test Results

Test Date (a)	*Ceriodaphnia dubia 7-Day*											*Fathead Minnows 7-Day*				
	UP[b]	C[c]	IC_{25}[d]	TU_c[e]	Survival			Reproduction			FF[i]	UP[b]	C[c]	IC_{25}[d]	TU_c[e]	FF[i]
					LOEC[f]	NOEC[g]	TU_c[h]	LOEC[f]	NOEC[g]	TU_c[h]						
09/28/06 (E)	NR	NR	>100	<1.0	NR	NR	<1.0	NR	NR	<1.0	0	0	NR	<1.0	NT	0
9/21/2007 (E)	NR	NR	100	1.0	NR	NR	1.0	NR	NR	1.0	0	0	NR	1.0	1	0
6/12/2009 (E)	0	NR	>100	<1.0	NR	NR	<1.0	NR	NR	<1.0	NT	0	NR	<1.0	BD	NT
6/10/2010 (E)	0	NR	>100	<1.0	NR	NR	<1.0	NR	NR	<1.0	NT	2.5	NR	<1.0	BD	NT
6/5/2011 (E)	0	NR	>100	<1.0	NR	NR	<1.0	NR	NR	<1.0	NT	2.6	NR	<1.0	BD	NT

[a]O = EPA test; E = entity test
[b]UP = upstream control water
[c]C = laboratory water control
[d]IC_{25} = inhibition concentration twenty-five
[e]TU_c = chronic toxicity units based on IC_{25}
[f]LOEC = lowest observed effects concentration
[g]NOEC = no observed effects concentration
[h]TU_c = chronic toxicity units based on LOEC and NOEC
[i]FF = far-field effect
[j]STU_c = TUc based on LOEC and NOEC for survival
[k]GTU_c = TUc based on LOEC and NOEC for growth
BD = below detection
NT = not tested

Table 5. Effluent Data for Girard WWTP

Parameter	Units		# of Samples	# > MDL	Average PEQ	Maximum PEQ
Self-Monitoring (DMR) Data						
Total Dissolved Solids [B]	mg/L		30	30	778.0	1005.
Ammonia	mg/L	S	292	291	5.565	11.71
Ammonia	mg/L	W	204	204	4.084	8.526
Nitrite+Nitrate [B]	mg/L		72	70	15.51	21.24
Phosphorus [B]	mg/L		278	275	3.711	5.405
Cyanide, free	µg/L		37	1	24.10	33.0
Nickel [B]	µg/L		49	20	24.02	32.90
Silver	µg/L		45	1	0.803	1.1
Strontium [B]	µg/L		32	32	247.8	287.2
Zinc [B]	µg/L		77	73	115.9	176.5
Cadmium [B]	µg/L		38	3	0.755	1.034
Lead [B]	µg/L		51	3	21.17	29.0
Chromium, tot. rec. [B]	µg/L		51	7	4.029	6.265
Copper [B]	µg/L		80	47	21.03	32.07
Chromium^{+6}, diss.	µg/L		35	1	4.757	6.516
Bis(2-ethylhexyl)phthalate [A] [B]	µg/L		36	11	29.71	40.70
Chlorine, tot. res.	µg/L		758	758	8.181	18.07
Mercury	ng/L		79	78	24.53	36.09
OEPA and Pretreatment Data						
Arsenic	µg/L		7	2	7.212	9.88
Barium	µg/L		2	2	63.8	87.4
Beryllium	µg/L		5	1	3.492	4.784
Chloride	mg/L		2	2	449.4	615.6
Iron	µg/L		1	1	2530.	3466.
Chloroform [A]	µg/L		7	1	1.942	2.66
Toluene	µg/L		7	2	2.58	3.534

[A] Carcinogen
[B] Ohio EPA and Pretreatment data was combined with the DMR data.

Table 6. Water Quality Criteria in the Study Area

Parameter	Units	Outside Mixing Zone Criteria: Inside Average: Human Health	Inside Average: Agri-culture	Inside Average: Aquatic Life	Maximum Aquatic Life	Mixing Zone Maximum
Ammonia - S	mg/L	--	--	1.4	--	--
Ammonia – W	mg/L	--	--	1.9	--	--
Arsenic	µg/L	--	100.	150.	340.	680.
Barium	µg/L	--	--	220.	2000.	4000.
Beryllium	µg/L	280.	100.	50.	420.	85.
Bis(2-ethylhexyl)phthalate	µg/L	59.	--	8.4	1100.	2100.
Cadmium	µg/L	--	50.	5.2	13.	26.
Chlorine, tot. res.	µg/L	--	--	11.	19.	38.
Chloroform	µg/L	4700.	--	140.	1300.	2600.
Chromium $^{+6}$, diss.	µg/L	--	--	11.	16.	31.
Chromium, tot. rec.	µg/L	--	100.	190.	3900.	7800.
Copper	µg/L	1300.	500.	21.	34.	68.
Cyanide, free	µg/L	220000.	--	12.	46.	92.
Iron	µg/L	--	5000.	--	--	--
Lead	µg/L	--	100.	21.	410.	810.
Mercury [A]	ng/L	12.	10000.	910.	1700.	3400.
Molybdenum	µg/L	--	--	20000.	190000.	370000.
Nickel	µg/L	4600.	200.	120.	1000.	2100.
Nitrate+Nitrite	mg/L	--	100.	--	--	--
Selenium	µg/L	11000.	50.	5.0	--	--
Silver	µg/L	_	_	1.3	8.1	16.
Strontium	µg/L	--	--	21000.	40000.	81000.
Toluene	µg/L	200000.	--	62.	560.	1100.
Total Dissolved Solids	mg/L	--	--	1500.	--	--
Zinc	µg/L	69000.	25000.	270.	270.	530.

[A] Bioaccumulative Chemical of Concern (BCC)

Table 7. Instream Conditions and Discharger Flow

Parameter	Units/Outfall		Value	Basis
Little Squaw Creek upstream of Girard WWTP				
7Q10	cfs	annual	0.	USGS gage #03097500, 1929-51 data
1Q10	cfs	annual	0.	USGS gage #03097500, 1929-51 data
30Q10	cfs	summer	0.	USGS gage #03097500, 1929-51 data
	cfs	winter	0.	USGS gage #03097500, 1929-51 data
HMQ	cfs	annual	0.	USGS gage #03097500, 1929-51 data
Mixing Assumption	%	average	100	Stream-to-discharge ratio
	%	maximum	100	Stream-to-discharge ratio
Instream Temperature	^{o}C	summer	21.6	Girard 901; 24 values, 2006-2011
		winter	9.0	Girard 901; 17 values, 2006-2011
Instream pH	S.U.	summer	7.9	Girard 901; 24 values, 2006-2011
		winter	8.3	Girard 901; 17 values, 2006-2011
Instream Hardness	mg/L	annual	256.	Girard 901; 70 values, 2006-2011
Girard WWTP flow	cfs	design	7.74	Plant design flow

Table 8. Summary of Effluent Limits to Maintain Applicable Water Quality Criteria

Parameter	Units	Average Human Health	Average Agri Supply	Average Aquatic Life	Maximum Aquatic Life	Inside Mixing Zone Maximum
Ammonia - S	mg/L	--	--	1.4	--	--
Ammonia - W	mg/L	--	--	1.9	--	--
Arsenic [B]	µg/L	--	100.	150.	340.	680.
Barium	µg/L	--	--	220.	2000.	4000.
Bis(2-ethylhexyl)phthalate	µg/L	59.	--	8.4.	1100.	2100.
Cadmium [B]	µg/L	--	50. [A]	5.2	13.	26.
Chlorine, tot. res.	µg/L	--	--	11.	19.	38.
Chromium, tot.[B]	µg/L	--	100.	190.	3900.	7800.
Chromium^{+6}, dissolved	µg/L	--	--	11.	16.	31.
Copper	µg/L	1300. [A]	500. [A]	21.	34.	68.
Cyanide free	µg/L	220000.[A]	--	12.	46.	92.
Iron	µg/L	--	5000.	--	--	--
Lead	µg/L	--	100.	21.	410.	810.
Mercury [C]	ng/L	12.	10000.[A]	910.	1700.	3400.
Molybdenum [B]	µg/L	--	--	20000.	190000.	370000.
Nickel [B]	µg/L	4600. [A]	200.	120.	1000.	2100.
Selenium [B]	µg/L	11000.	50.	5.0	--	--
Silver	µg/L	--	--	1.3	8.1	16.
Total Dissolved Solids	mg/L	--	--	1500.	--	--
Zinc	µg/L	69000. [A]	25000. [A]	270.	270.	530.

[A] Allocation must not exceed the Inside Mixing Zone Maximum.

[B] Parameter would not require a WLA based on reasonable potential procedures, but allocation requested for use in pretreatment program.

[C] Bioaccumulative Chemical of Concern (BCC); no mixing zone allowed after 11/15/2010, criteria must be met at end-of-pipe unless the requirements for an exception are met as listed in 3745-2-08.

Table 9. Parameter Assessment

Group 1: Due to a lack of criteria, the following parameters could not be evaluated at this time.

Chloride	Phosphorus

Group 2: PEQ < 25% of WQS or all data below minimum detection limit; WLA not required. No limit recommended, monitoring optional.

Arsenic	Beryllium	Cadmium
Chloroform	Chromium, tot.	Molybdenum
Nickel	Nitrate+Nitrite	Selenium
Strontium	Toluene	

Group 3: PEQ_{max} < 50% of maximum PEL and PEQ_{avg} < 50% of average PEL. No limit recommended, monitoring optional.

Barium

Group 4: $PEQ_{max} \geq$ 50% but <100% of the maximum PEL or $PEQ_{avg} \geq$ 50% but < 100% of the average PEL. Monitoring is appropriate.

$Chromium^{+6}$, diss.	Iron	Silver
Total Dissolved Solids	Zinc	

Group 5: Maximum PEQ $\geq$ 100% of the maximum PEL or average PEQ $\geq$ 100% of the average PEL, or either the average or maximum PEQ is between 75 and 100% of the PEL and certain conditions that increase the risk to the environment are present. Limit recommended.

Limits to Protect Numeric Water Quality Criteria

Parameter	Units	Applicable Period	Recommended Effluent Limits Average	Maximum
Ammonia	mg/L	summer	1.4	--
Ammonia	mg/L	winter	1.9	--
Bis(2-ethylhexyl)phthalate	µg/L	annual	8.4	1100.
Chlorine, total res.	µg/L	summer only	11.	19.
Copper	µg/L	annual	21.	34.
Cyanide, free	µg/L	annual	12.	46.
Lead	µg/L	annual	21.	410.
Mercury	ng/L	annual	12.	1700.

Table 10. Final Effluent Limits and Monitoring Requirements for the Girard WPCF

			Effluent Limits				
			Concentration		Loading (kg/day)[a]		
Parameter		Units	30 Day Average	Daily Maximum	30 Day Average	Daily Maximum	Basis[b]
Flow		MGD	- - - - - - - - - - - -	Monitor	- - - - - - - - - - - - - - -		M[c]
Temperature		°C	- - - - - - - - - - - -	Monitor	- - - - - - - - - - - - - - -		M[c]
Dissolved Oxygen		mg/l	--	5.0	--	--	WQS
$CBOD_5$		mg/l	25	40[d]	473	757[d]	BPT
Suspended Solids		mg/l	30	45[d]	568	852[d]	BPT
Dissolved Solids		mg/l	- - - - - - - - - - - -	Monitor	- - - - - - - - - - - - - - -		M/RP[c]
Ammonia-N		mg/l	- - - - - - - - - - - -	Monitor	- - - - - - - - - - - - - - -		M[c]
Kjeldahl N		mg/l	- - - - - - - - - - - -	Monitor	- - - - - - - - - - - - - - -		M[c]
Nitrate/Nitrite-N		mg/l	- - - - - - - - - - - -	Monitor	- - - - - - - - - - - - - - -		M[c]
Phosphorus		mg/l	- - - - - - - - - - - -	Monitor	- - - - - - - - - - - - - - -		M[c]
Oil and Grease		mg/l	--	10	--	--	WQS
pH		S.U.	- - - - - - - - - - - - -	6.5 to 9.0	- - - - - - - - - - - -		WQS
E. coliform	#/100ml						
Summer			126	284[d]	--	--	WQS
Chlorine Residual		mg/l	--	0.19	--	--	WLA
Cyanide, Free		mg/l	0.012	0.046	0.23	0.87	WLA
Cadmium, T. R.		µg/l	- - - - - - - - - - - -	Monitor	- - - - - - - - - - - - - - -		M[c]
Chromium, T. R.		µg/l	- - - - - - - - - - - -	Monitor	- - - - - - - - - - - - - - -		M[c]
Hex. Chromium (Dissolved)		µg/l	- - - - - - - - - - - -	Monitor	- - - - - - - - - - - - - - -		M/RP[c]
Copper, T. R.		µg/l	20	33	0.38	0.63	ABS/EP
Iron, T. R.		µg/l	- - - - - - - - - - - -	Monitor	- - - - - - - - - - - - - - -		M/RP[c]
Lead, T. R.		µg/l	21	410	0.40	7.8	WLA
Mercury, T.		ng/l	12	1100	0.00023	0.021	WLA, ABS
Nickel, T. R.		µg/l	- - - - - - - - - - - -	Monitor	- - - - - - - - - - - - - - -		M[c]
Silver, T. R.		µg/l	- - - - - - - - - - - -	Monitor	- - - - - - - - - - - - - - -		M/RP[c]
Zinc, T. R.		µg/l	- - - - - - - - - - - -	Monitor	- - - - - - - - - - - - - - -		M/RP[c]
Bis(2-ethylhexyl) phthalate		µg/l	1.8	1100	0.034	20.8	ABS, WLA
Whole Effluent Toxicity							
Acute		TUa	--	1.0	--	--	BEJ/WET/RP
Chronic		TUc	- - - - - - - -	Monitor (w/o trigger)	- - - - - - - - - -		WET

Table 10. Con't.

[a] Effluent loadings based on average design discharge flow of 5.0 MGD.

[b] Definitions:

ABS = Antibacksliding Rule (OAC 3745-33-05(E) and 40 CFR Part 122.44(l))
BPT = Best Practicable Waste Treatment Technology, 40 CFR Part 133, Secondary Treatment Regulation
EP = Existing Permit
M = BEJ of Permit Guidance 2: Determination of Sampling Frequency Formula for Industrial Waste Discharges
RP = Reasonable Potential for requiring water quality-based effluent limits and monitoring requirements in NPDES permits (3745-33-07(A))
WET = Whole Effluent Toxicity (OAC 3745-33-07(B))
WLA = Wasteload Allocation procedures (OAC 3745-2)
WQS = Ohio Water Quality Standards (OAC 3745-1)

[c] Monitoring of flow and other indicator parameters is specified to assist in the evaluation of effluent quality and treatment plant performance.

[d] 7 day average limit.

Attachment – River Segment Summary from Ohio Integrated Report

Division of Surface Water Large River Assessment Unit Summary

Overview Information

Waterbody: Mahoning River
Segment: Eagle Creek to Pennsylvania border
Length: 37.00 miles
Priority Points: 6
Monitoring Scheduled: 2013
TMDL Scheduled: 2016

Aquatic Life Use Assessment

Reporting Category: 5x
Aquatic Life Uses: WWH
Sampling Years: 1997, 2002, 2003, 2006
Sites Monitored: 14
Total Miles Monitored: 16.00
Assessment Unit Score: 47.5
Miles in Full Attainment: 7.60 (47.50%)
Miles in Partial Attainment: 3.40 (21.30%)
Miles in Non Attainment: 5.00 (31.20%)

Most Recent Data

Year Assessed	Station Name	River Mile	Drainage Area	Aquatic Life Use	Attainment Status
2006	MAHONING R. AT WARREN @ 3RD ISLAND DST. SUMMIT ST.	39.08	594	WWH	Full
2006	MAHONING R. AT WARREN @ WEST MARKET ST.	38.26	594	WWH	Full
2006	MAHONING R. NEAR YOUNGSTOWN SHEET & TUBE, CAMPBELL	17	1018	WWH	Non
2006	MAHONING R. AT LTV STEEL CAMPBELL @ POLAND AVE.	16.46	1022	WWH	Non
2006	MAHONING R. DST. LTV 039, UPST. 041	16.1	1022	WWH	Non

Causes of Impairment

cause unknown
chlorine
direct habitat alterations
metals
nutrients
oil and grease
organic enrichment/DO
priority organics
thermal modifications

Sources of Impairment

combined sewer overflows
contaminated sediments
dam construction - development
flow regulation/modification - development
hazardous wastes
major municipal point source
minor industrial point source
source unknown
spills
urban runoff/storm sewers (NPS)

Comments: The WWH aquatic life use for the Mahoning River mainstem was listed as impaired based on historical data in the 2006 Integrated Report. For the 2008 report, aquatic life data from several small surveys conducted between 1997 and 2006 were included to update the mainstem assessment. Mainstem coverage was somewhat limited in that only 16 of 37 mainstem miles were considered assessed based on these small surveys. Aquatic life use status of the remaining 21 miles remains unknown. Identified causes and sources based on the intensive survey conducted in 1994 were carried over to this Integrated Report.

Recreation Use Assessment

Reporting Category: 3i

Assessment Unit Score: Not calculated

Public Drinking Water Supply Assessment

Reporting Category: 0

Cause of Impairment: None

Nitrate Watch List: No

Fish Tissue Assessment

Reporting Category: 5

Causes of Impairment: PCBs

PCB Concentration: 531 ppb